Name: _____ Date: _____

Character Comparison

Title: _____

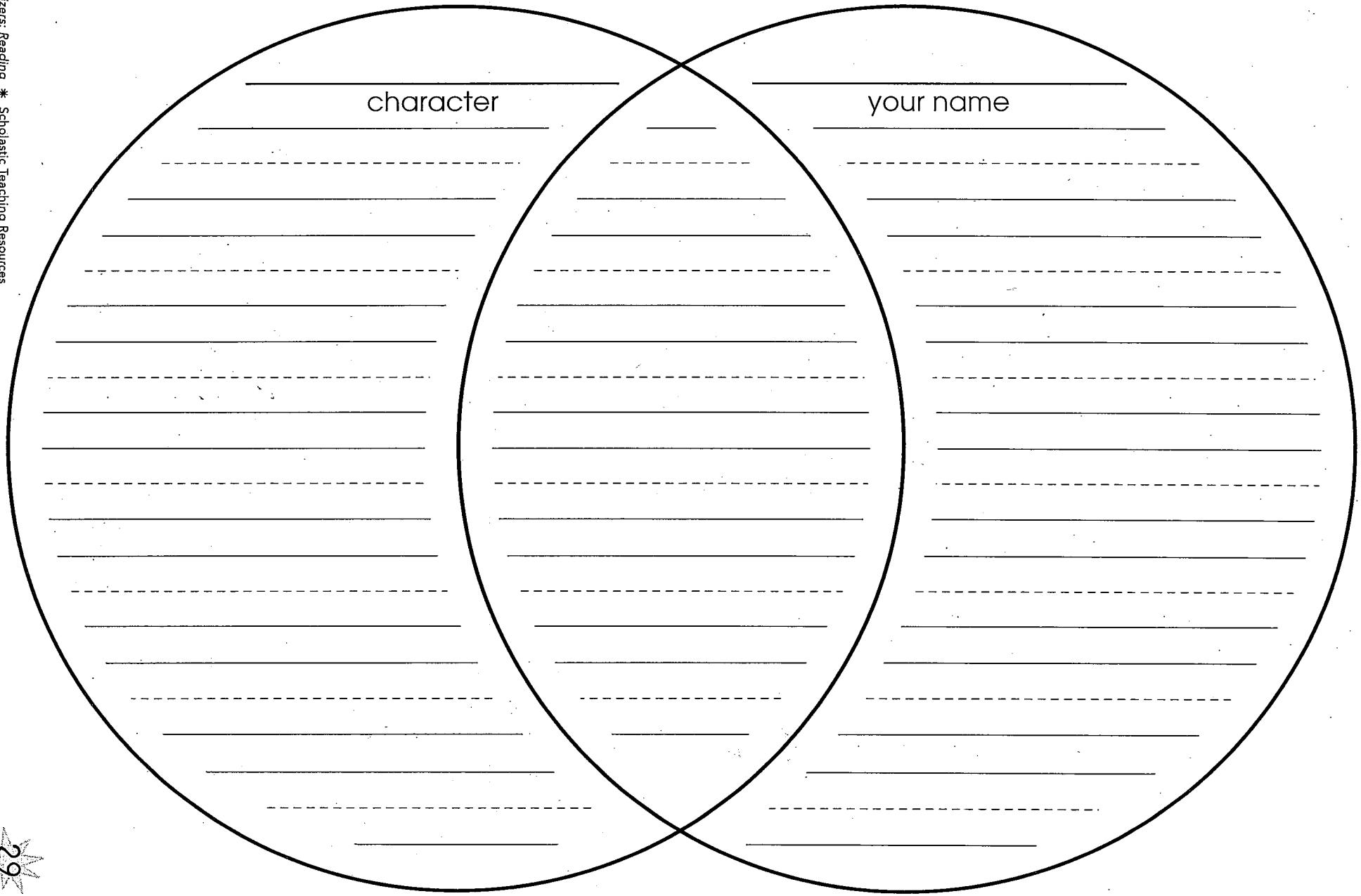

Name: _____ Date: _____

All Aboard!

Title: _____

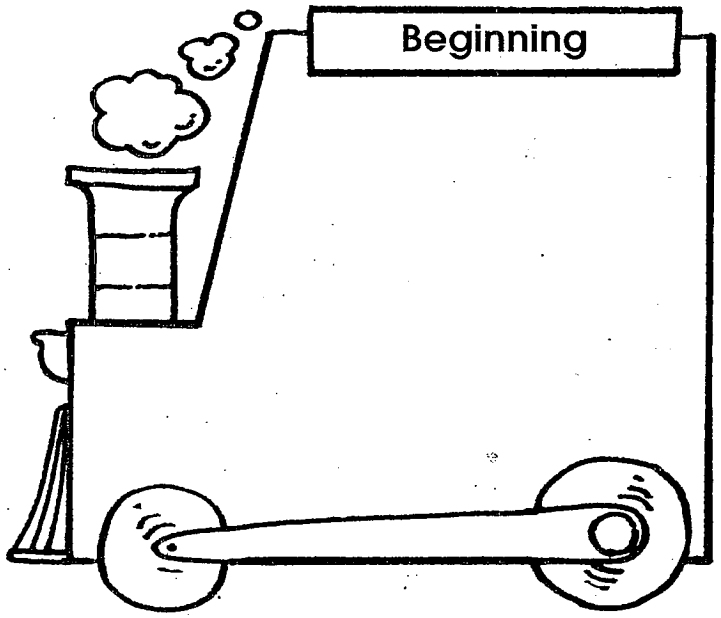

Beginning	Middle	End

Name: _____ Date: _____

Scoops of Details

Title: _____

Detail

Detail

Detail

The main idea is...

_____

_____

_____

_____

Name: _____ Date: _____

Bucket of Words

Title: _____

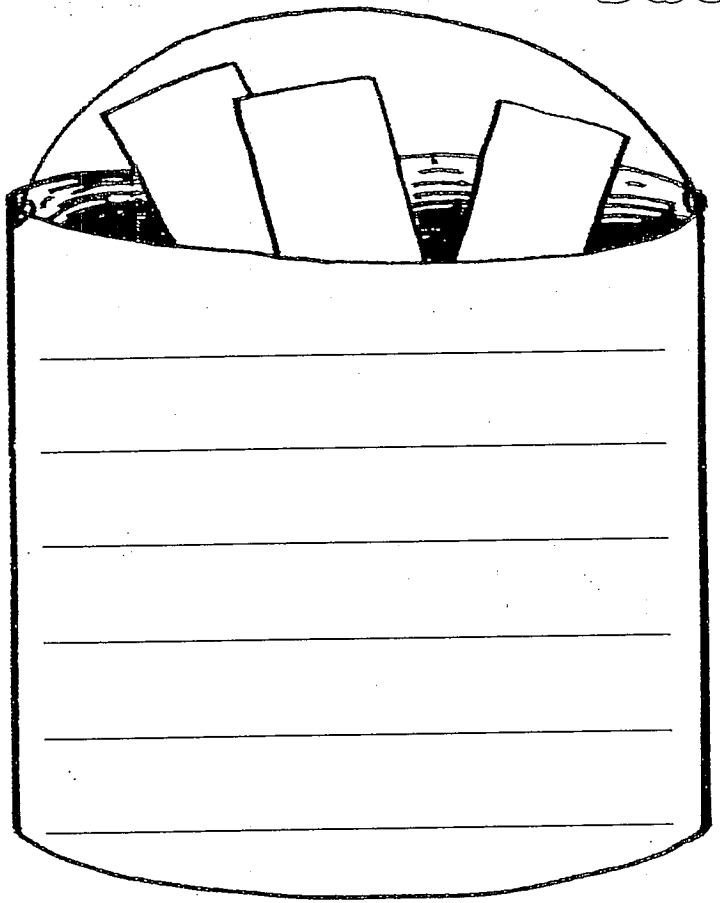

Word: _____

I think it means...

_____

Other words it reminds me of...

_____

It means...

_____

Problem

Solution

Name: _____ Title: _____ Date: _____

Setting

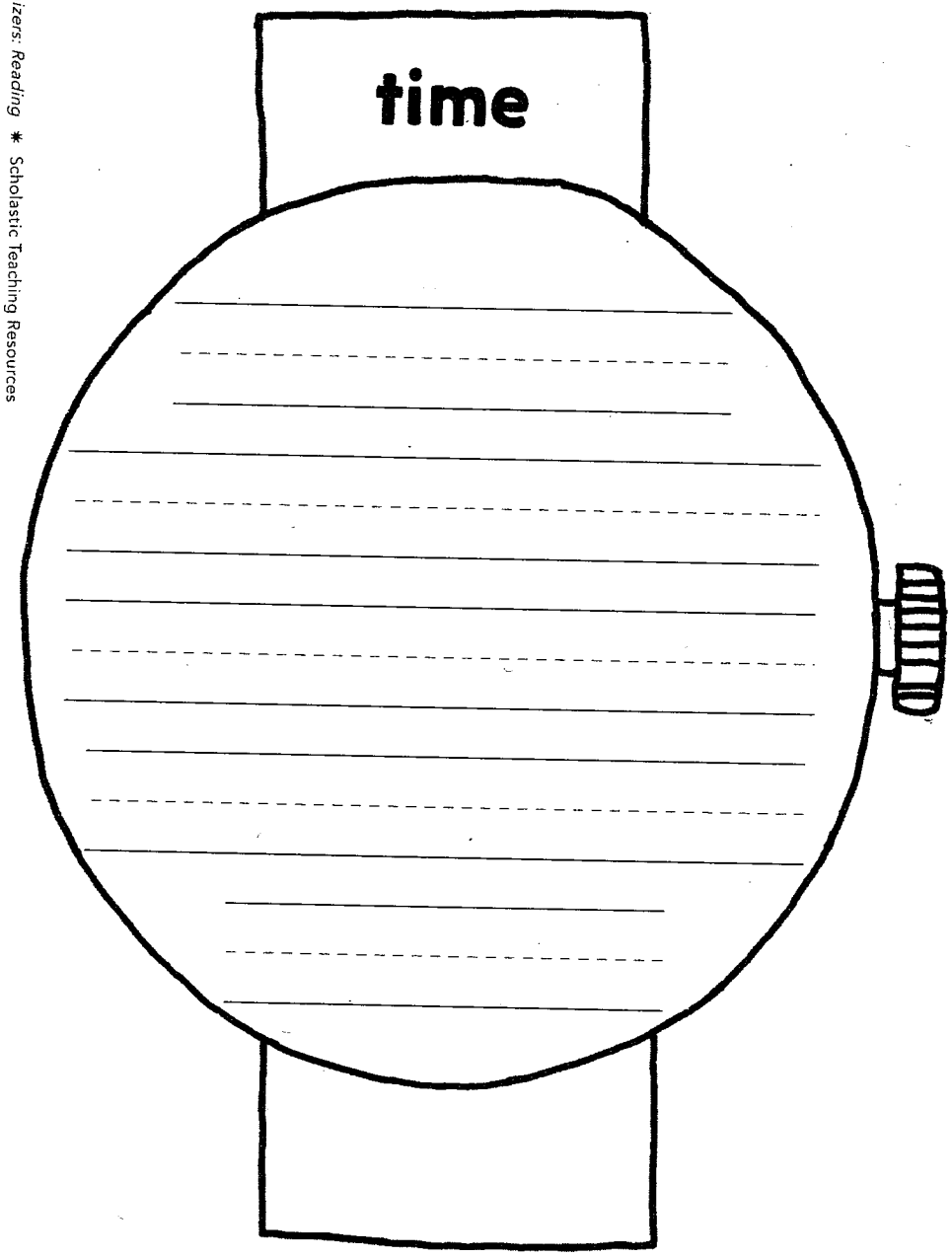

Name: _____

Date: _____

Character Columns

Title: _____

Character: _____

sees	does	feels	thinks

Name: _____ Date: _____

Character Report

Title: _____

Character: _____

verbs
actions the character does

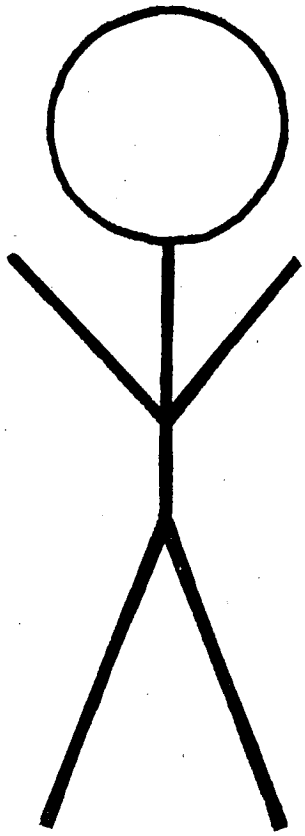

adjectives
words that describe the character

Name: _____ Date: _____

Sequence Circle

Title: _____

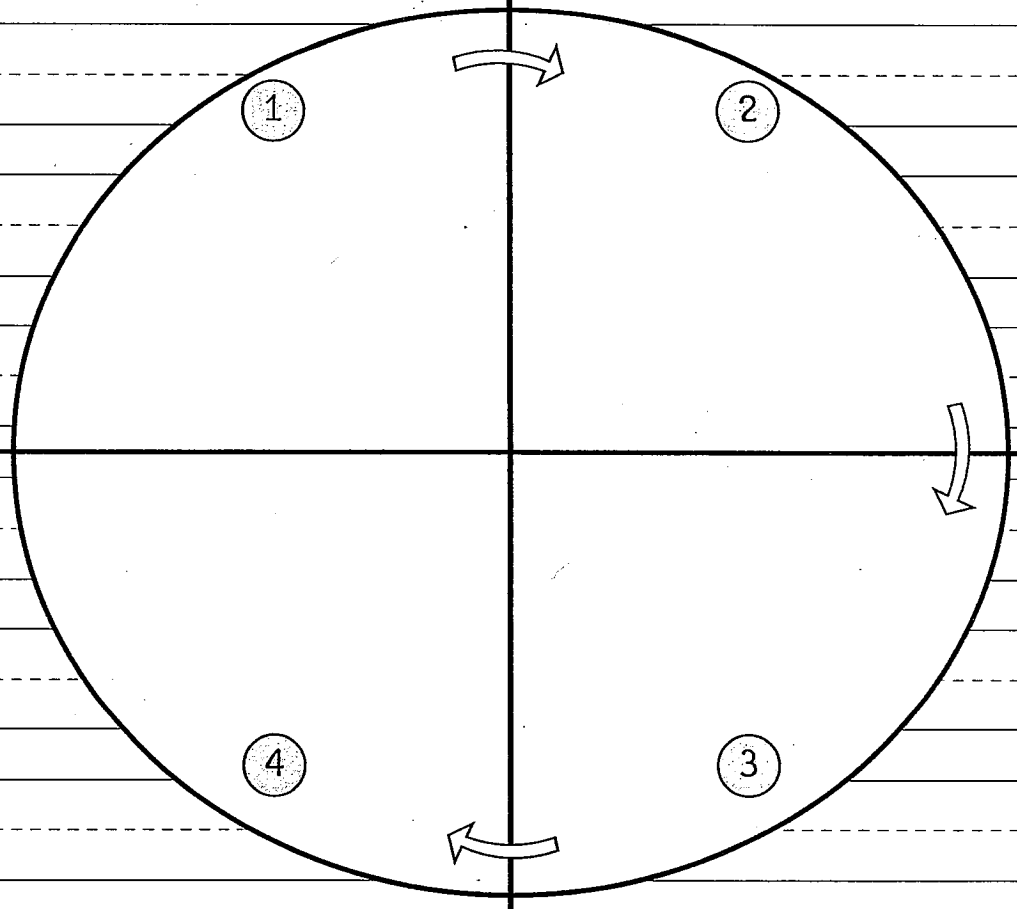

Name _____

Key Strategy: Character

Title of the Book _____

Draw your favorite Character from the book. Make sure to use color and your best efforts.